TYPES 11 / 22

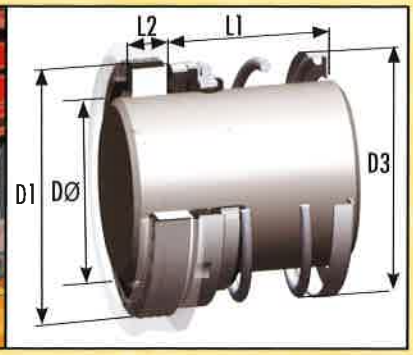

Single spring, resilient, rubber diaphragm seal with two working length options, and a Type 11 boot mounted stationary as standard, to suit common originally American housing sizes. A widely utilised seal type, highly suited to general duties, capable of long service life.
Also available with 'O'-Ring mounted Stationaries, as Types 11J and 22J, Please refer over-leaf. In addition, Types 11/22 can be purchased as a seal only to be installed with any one of a variety of Stationaries.

VULCAN STANDARD SIZES

Imperial Shaft Size DØ	Metric Shaft Size DØ	Size Code	D1		D3 Standard Profile		TYPE 11 L1		TYPE 22 L1		L2	
			Imperial	Metric	Imperial	Metric	Imperial	Metric	Imperial	Metric	Imperial	Metric
0.500		0127	1.000	25.40	0.925	23.50	0.812	20.62	1.250	31.75	0.312	7.93
	14	0140	1.250	31.75	1.063	27.00	0.875	22.23	1.375	34.93	0.405	10.28
0.625		0158	1.250	31.75	1.063	27.00	0.875	22.23	1.375	34.93	0.405	10.28
	16	0160	1.250	31.75	1.063	27.00	0.875	22.23	1.375	34.93	0.405	10.28
	18	0180	1.375	34.93	1.209	30.70	0.875	22.23	1.375	34.93	0.405	10.28
0.750		0191	1.375	34.93	1.209	30.70	0.875	22.23	1.375	34.93	0.405	10.28
	20	0200	1.500	38.10	1.315	33.40	0.937	23.80	1.437	36.50	0.405	10.28
	22	0220	1.500	38.10	1.315	33.40	0.937	23.80	1.437	36.50	0.405	10.28
0.875		0222	1.500	38.10	1.315	33.40	0.937	23.80	1.437	36.50	0.405	10.28
	24	0240	1.625	41.28	1.543	39.20	1.000	25.40	1.625	41.28	0.437	11.10
	25	0250	1.625	41.28	1.543	39.20	1.000	25.40	1.625	41.28	0.437	11.10
1.000		0254	1.625	41.28	1.701	43.20	1.000	25.40	1.625	41.28	0.437	11.10
	28	0280	1.750	44.44	1.795	45.60	1.062	26.97	1.687	42.85	0.437	11.10
1.125		0286	1.750	44.44	1.795	45.60	1.062	26.97	1.687	42.85	0.437	11.10
	30	0300	1.875	47.63	1.866	47.40	1.062	26.97	1.687	42.85	0.437	11.10
1.250		0317	1.875	47.63	1.866	47.40	1.062	26.97	1.687	42.85	0.437	11.10
	32	0320	1.875	47.63	1.866	47.40	1.062	26.97	1.687	42.85	0.437	11.10
	33	0330	2.000	50.80	2.047	52.00	1.125	28.58	1.687	42.85	0.437	11.10
1.375		0349	2.000	50.80	2.047	52.00	1.125	28.58	1.687	42.85	0.437	11.10
	35	0350	2.000	50.80	2.071	52.00	1.125	28.58	1.687	42.85	0.437	11.10
	38	0380	2.125	53.98	2.189	55.60	1.125	28.58	1.687	42.85	0.437	11.10
1.500		0381	2.125	53.98	2.197	55.60	1.125	28.58	1.687	42.85	0.437	11.10
	40	0400	2.375	60.33	2.331	59.20	1.375	34.93	2.000	50.80	0.500	12.70
1.625		0412	2.375	60.33	2.331	59.20	1.375	34.93	2.000	50.80	0.500	12.70
	43	0430	2.500	63.50	2.563	65.10	1.375	34.93	2.000	50.80	0.500	12.70
1.750		0444	2.500	63.50	2.563	65.10	1.375	34.93	2.000	50.80	0.500	12.70
	45	0450	2.625	66.68	2.563	65.10	1.500	38.10	2.125	53.98	0.500	12.70
1.875		0476	2.625	66.68	2.626	66.70	1.500	38.10	2.125	53.98	0.500	12.70
	48	0480	2.750	69.85	2.626	66.70	1.500	38.10	2.125	53.98	0.500	12.70
	50	0500	2.750	69.85	2.795	71.00	1.500	38.10	2.125	53.98	0.500	12.70
2.000		0508	2.750	69.85	2.886	73.30	1.500	38.10	2.125	53.98	0.500	12.70
	53	0530	3.000	76.20	2.886	73.30	1.687	42.85	2.375	60.32	0.562	14.28
2.125		0539	3.000	76.20	2.886	73.30	1.687	42.85	2.375	60.32	0.562	14.28
	55	0550	3.125	79.38	3.094	78.60	1.687	42.85	2.375	60.32	0.562	14.28
2.250		0571	3.125	79.38	3.094	78.60	1.687	42.85	2.375	60.32	0.562	14.28
	60	0600	3.250	82.55	3.232	82.10	1.812	46.02	2.500	63.50	0.562	14.28
2.375		0603	3.250	82.55	3.232	82.10	1.812	46.02	2.500	63.50	0.562	14.28
2.500		0635	3.375	85.73	3.331	84.60	1.812	46.02	2.500	63.50	0.562	14.28
	65	0650	3.375	85.73	3.488	88.60	1.937	49.20	2.750	69.85	0.625	15.88
2.625		0666	3.375	85.73	3.488	88.60	1.937	49.20	2.750	69.85	0.625	15.88
2.750		0698	3.500	88.90	3.543	90.00	1.937	49.20	2.750	69.85	0.625	15.88
	70	0700	3.500	88.90	3.543	90.00	1.937	49.20	2.750	69.85	0.625	15.88
2.875		0730	3.750	95.25	3.748	95.20	2.062	52.37	2.875	73.03	0.625	15.88
	75	0750	3.875	98.43	4.043	102.70	2.062	52.37	2.875	73.03	0.625	15.88
3.000		0762	3.875	98.43	4.043	102.70	2.062	52.37	2.875	73.03	0.625	15.88
3.125		0794	4.000	101.60	4.094	104.00	2.187	55.55	3.125	79.37	0.783	19.88
3.250		0825	4.125	104.78	4.094	104.00	2.187	55.55	3.125	79.37	0.783	19.88
3.375		0857	4.250	107.95	4.252	108.00	2.187	55.55	3.125	79.37	0.783	19.88
3.500		0889	4.375	111.13	4.409	112.00	2.187	55.55	3.125	79.37	0.783	19.88
3.625*		0921	4.500	114.30	4.488	114.00	2.312	58.72	3.250	82.55	0.783	19.88
3.750		0953	4.625	117.48	4.685	119.00	2.312	58.72	3.250	82.55	0.783	19.88
3.875*		0984	4.750	120.65	4.764	121.00	2.312	58.72	3.375	85.72	0.783	19.88
4.000		1016	4.875	123.83	4.882	124.00	2.312	58.72	3.375	85.72	0.783	19.88

All types, sizes and materials shown are part of Vulcan's Guaranteed Ex-Stock Range, unless marked with an asterisk*.
However, most asterisked sizes are stocked in some, but not all, materials. And the asterisked materials in many sizes.

Suggested Operating Limits

Maximum Operating Pressure Limits primarily depend upon Face Materials, Shaft Size, Speed and Media. Please refer to the Seal Type Specific PV Chart, found at the front of this Brochure Section, in combination with the Vulcan Multiplying Factors found in Technical and Material Standards Section 2.

GUARANTEED STOCK MATERIALS AND FACE MATERIAL CODE					
Seal And Seat Assembly		Rotary Face		Stationary Face	
Face Reference Term	Code	Material	Code	Material	Code
SOFT	C	M106K Carbon	C	99% Ceramic	A
SOFT VS HARD	D	M106K Carbon	C	VES2 RB SiC	S
HARD VS SOFT	G	VES2 RB SiC	S	99% Ceramic	A
HARD	S	VES2 RB SiC	S	VES2 RB SiC	S
HARD 1st ALT	H	Tungsten Carbide*	H	Tungsten Carbide*	H
Guaranteed Stock Elastomers: Viton®, E.P. and Nitrile				Guaranteed Stock Melallurgy: 304SS	

Please refer to the Technical and Material Standards Section for advice and information on our full range of materials, guaranteed stock policies and more advice on operating limits.